CaveBoy 回路図

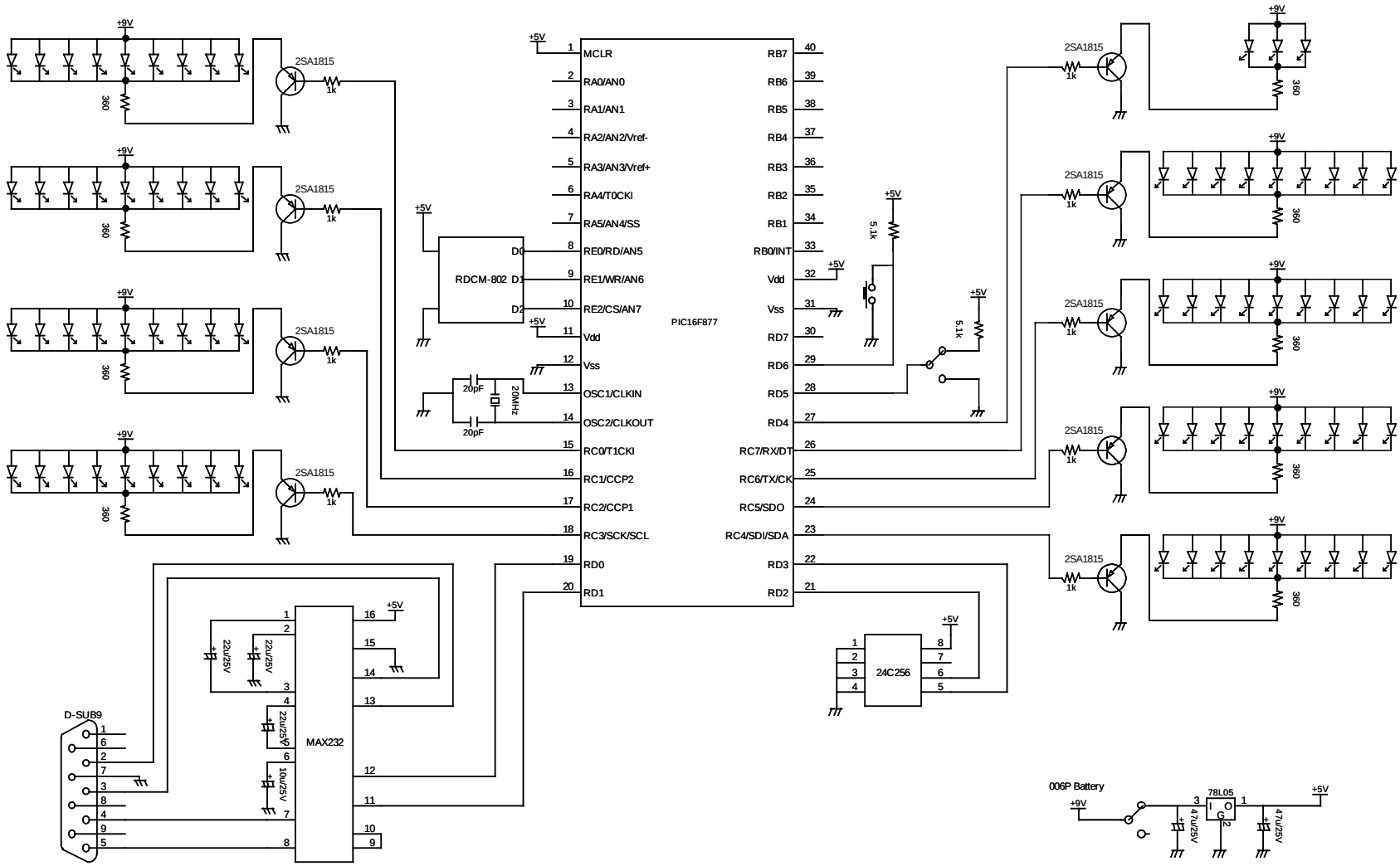
+9V
360
2SA1815
1k
+5V
RDCM-802
D0
D1
D2
20pF
20MHz
PIC16F877
MCLR
RA0/AN0
RA1/AN1
RA2/AN2/Vref-
RA3/AN3/Vref+
RA4/T0CKI
RA5/AN4/SS
RE0/RD/AN5
RE1/WR/AN6
RE2/CS/AN7
Vdd
Vss
OSC1/CLKIN
OSC2/CLKOUT
RC0/T1CKI
RC1/CCP2
RC2/CCP1
RC3/SCK/SCL
RD0
RD1
RB7
RB6
RB5
RB4
RB3
RB2
RB1
RB0/INT
Vdd
Vss
RD7
RD6
RD5
RD4
RC7/RX/DT
RC6/TX/CK
RC5/SDO
RC4/SDI/SDA
RD3
RD2
5.1k
24C256
MAX232
22u/25V
10u/25V
D-SUB9
006P Battery
78L05
47u/25V